Type 19-450

UHF and GPS SatCOM Antenna
240 MHz - 400 MHz

19-450-DS Issue 1

The most important thing we build is trust

The **19-450 UHF and GPS SatCOM Antenna** is a combined UHF satellite communications and Global Positioning System (GPS) antenna. The antenna is low profile in construction and intended for airborne applications.

The UHF section provides essentially hemispherical satellite communications coverage. The GPS section provides nominal hemispherical coverage in the GPS L1 and L2 frequency bands to allow reception of microwave signals from a number of satellites.

A variant of the **19-450**, the **19-450N**, offers alternative types of connector.

The UHF section comprises two independent elements:

- A circularly polarized turnstile antenna comprising a pair of quadrature connected broadband horizontal crossed dipoles, fed via a pair of Roberts baluns. The antenna is polarized Right Hand Circular (RHCP) according to IEEE definition.
- A vertically polarized, reactively matched, broadband, folded monopole.

Low angle (0° to 35° nominal) coverage is provided by the vertical element, and high angle (35° to 90° nominal) coverage is provided by the circularly polarized element. In this way, essentially full hemispheric coverage is achieved for satellite communications. Both elements are dc grounded to provide a degree of lightning protection.

The GPS section is a stacked patch arrangement giving right-hand circularly polarised radiation.

The **19-450** utilizes a one-piece vertical shell moulded under heat and pressure for high strength and resistance to moisture ingress.

The horizontal element is contained within a circular fibreglass moulding, which is securely and permanently fitted to the vertical shell.

An aluminium alloy base plate provides for fixing the antenna to the airframe. Careful design of internal ribs and base-to-shell load transfer ensures very high side loading acceptance.

The GPS element is mounted rigidly on the top face of the antenna.

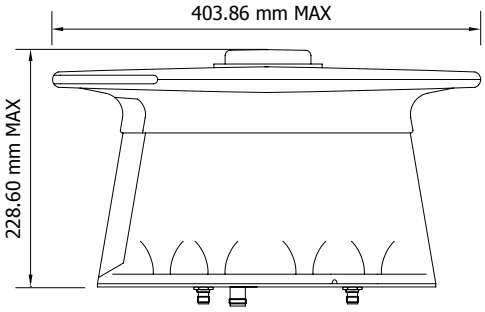

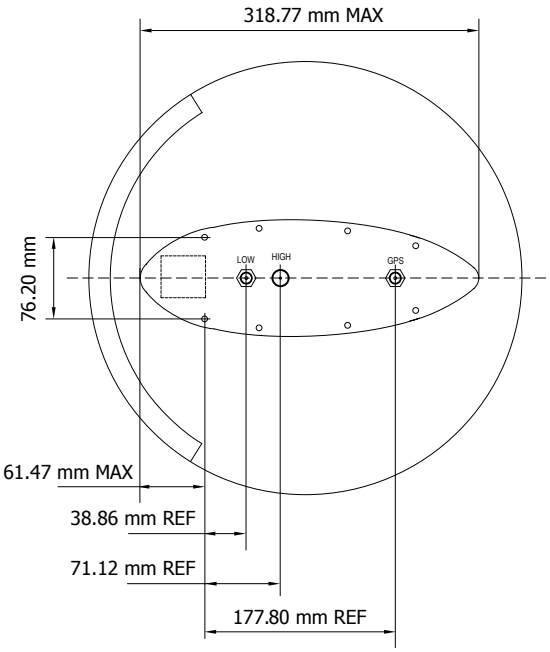

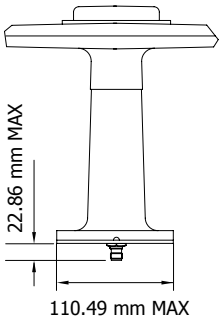

Type 19-450

UHF AND GPS SatCOM Antenna

COBHAM

Electrical Specification

UHF Low and High Angle SatCOM

Frequency	240 MHz - 400 MHz
Gain	Low Angle: Average within 2 dB of a quarter wave stub High Angle: +4.5 dBiC minimum (average full band) at zenith
Polarisation	Low Angle: Essentially vertical when mounted vertically High Angle: Predominantly RHCP at zenith
Power Rating	200 W max
Impedance	50 ohm nominal
VSWR	Low Angle: 2.5:1 max High Angle: 2.0:1 max
Isolation	≥ 15 dB Between Low and High Angle ≥ 30 dB Between Low Angle and GPS ≥ 30 dB Between High Angle and GPS

Connectors	Type	Low Angle	High Angle
	19-450	TNC Type Female	N Type Female
	19-450N	N Type Female	N Type Female

GPS SatCOM

Frequency	L1 band: 1565 MHz - 1586 MHz L2 band: 1217 MHz - 1238 MHz
Gain	+4 dBiC typical at zenith
Polarisation	Predominantly RHCP at zenith
Impedance	50 ohm nominal
VSWR	2.0:1 max
Connectors	TNC Type Female

Mechanical Specification

Height	228.60 mm
Width	403.86 mm
Weight	4 kg
Mounting	8 holes fixed location

Environmental Specification

High Temperature	MIL-STD-810D, Method 501.2, Procedures I and II Operational: +71°C Storage: +85°C
Low Temperature	MIL-STD-810D, Method 502.2, Procedures I and II Operational: -51°C Storage: -62°C
Altitude and Rate of Change	MIL-STD-810D, Method 500.2, Procedure II 30,000 ft and 2,000 ft/minute
Shock	MIL-STD-810C, Method 516.2, Procedure I 15 g, 11 ms, sine
Vibration	MIL-STD-810E, Method 514.4, Procedure I, Category 6
Humidity	MIL-STD-810D, Method 507.2, Procedure III 95% RH, 60°C - 30°C, 10 cycles
Salt Fog	MIL-STD-810D, Method 509.2, Procedure I

© 2010 Cobham Antenna Systems
The information contained herein is subject to change without notice and must not be taken as establishing any commitment binding upon Cobham Antenna Systems. No responsibility can be accepted for any errors or omissions.

For further information please contact:

Cobham Antenna Systems
The Cobham Centre
Fourth Avenue, Marlow,
Buckinghamshire, SL7 1TF England
Tel: +44 (0)1628 472072
Fax: +44 (0)1628 482255
Email: antennasystems.marlow.marketing@cobham.com