COBHAM AEROSPACE CONNECTIVITY

10A19

L-Band IFF Blade.

Type 10A19 is designed as an airborne IFF blade antenna with a very good match at these frequencies. It is rugged and has a low profile.

Electrical Specification

Frequency Range (MHz)	1020 - 1100
Impedance	50 Ω
VSWR	<1.2: 1
Gain	> -1 dB relative to a resonant quarter wave monopole
Polarisation	Vertical
Radiation	Omnidirectional
Power Handling	Not less than 1.5kW peak at a mean level of 15W at 35,000 ft

Mechanical Specification

Dimensions (LxWxH)	72 x 41 x 79 (mm)
Height Above Base	79 mm
Mass	0.09 kg
Connector	TNC Female, BNC Probe
Platform(s)	Air

Standards

Environmental	DO-160
Continuous Operating Temperature	- 40°C Min + 70°C Max
Vibration	BS 3G 100 Pt. 2. Sect 3.3.1, Region A, Cat 5

Key Features

With Test Probe

TNC type connector

Rugged

Good match

Low Drag

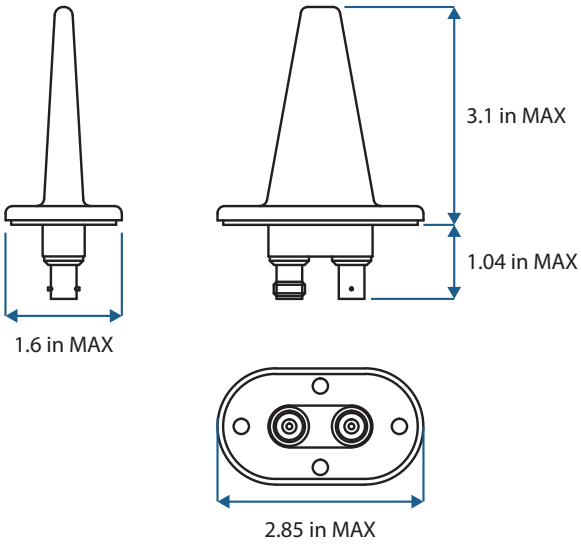

For further information please contact **Cobham Aerospace Connectivity**
The Cobham Centre, Fourth Avenue, Marlow, Buckinghamshire, SL7 1TF England.
Tel: +44 (0)1628 472072 E-mail: marlow.marketing@cobham.com

cobhamaerospaceconnectivity.com

V1 ©Cobham Aerospace Connectivity 2020
The information shown in this datasheet is given in good faith and is intended for guidance only.
It should not be used for specifications and no warranty is given or is implied with respect to such information.